MERCURY DISPLACEMENT INDUSTRIES, INC.
Post Office Box 710 - U.S. 12 East - Edwardsburg, Michigan 49112-0710
Phone (269) 663-8574 - Fax (269) 663-2924
(800) 634-4077

2 POLE 35/60 AMP NARROW MOUNT SERIES NORMALLY OPEN

LOAD CONNECTORS: #4 TO #14 AWG FOR 35 AMP
OR #2 TO #8 AWG FOR 60 AMP

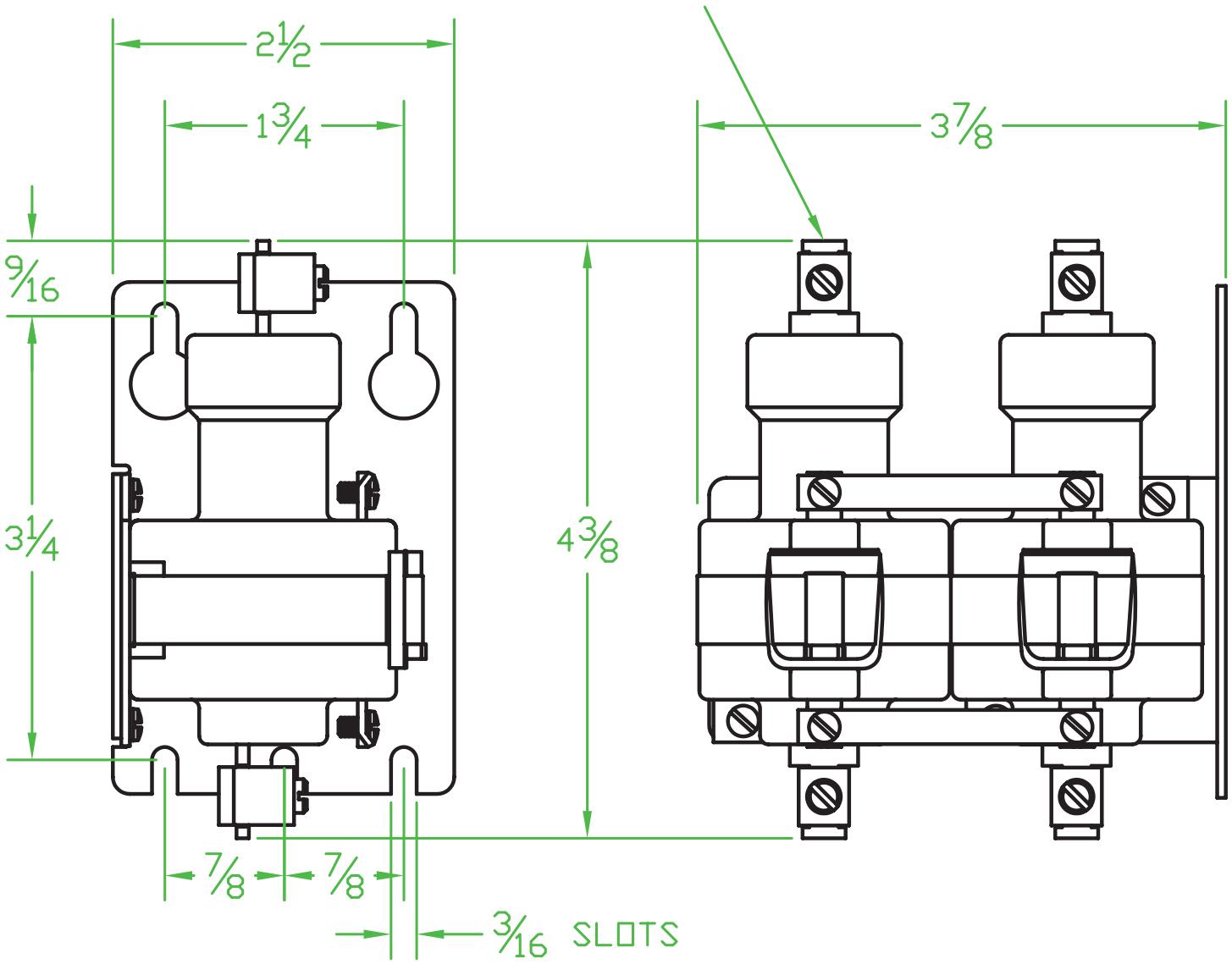

Contactors - Relays - Switches

http://www.mdius.com